Indian Maritime University

(A Central University, Govt of India)

End Semester Examinations – December 2022

Programme Name: B Tech (ME)

Semester: VII

Subject Code: UG11T3702

Subject Name: Advanced Marine Control Engineering and Automation

Date: 12.12.2022	Max Marks: 70
Duration: 03 Hrs	Pass Marks: 35

General Instructions

(i) All Sections (A, B & C) are to be attempted.
(ii) Options, if any, are specified in respective section.

(iii) Ordinary Graph sheets be provided.

Section A

Ten MCQs/Fill in the Blanks of 01 Mark each – Choose the correct answer as applicable.

1. In open loop system
   (a) The control action depends on the size of the system
   (b) The control action depends only on the system variable
   (c) The control action depends only on the Input signal
   (d) The control action is independent of the output
2. In torque –current analogy, moment of Inertia is analogous to _____
   (a) Resistance
   (b) Capacitance
   (c) Inductance
   (d) Conductance
3. Which is true for the system with the function
   $G(s)\ H(s) = 10/\ [s^2(s+1)]$
   (a) Type 3 Order 2
   (b) Type 2 Order 2
   (c) Type 2 Order 3
   (d) Type 3 Order 3
4. The steady state error for Type 1 system with unit ramp input is _____
   (a) 1/Kp
   (b) 1/ [1+Kp]
   (c) 1/Kv
   (d) 1/Ka
5. The closed loop transfer function of a system is

C(s) / R(s) = 10 / [s^2+6s+10]. The system is

(a) Under damped
(b) Critically damped
(c) Un-damped
(d) Over damped

6. The Polar Plot shown below represents a system of

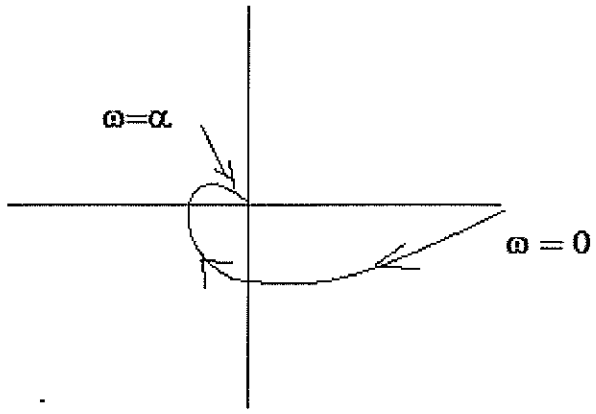

(a) Type 0 Order 0
(b) Type 0 Order 1
(c) Type 0 Order 2
(d) Type 0 Order 3

7. If the Nyquist plot cuts the negative real axis at a distance of 0.8, then gain margin of the system is

(a) -0.8
(b) 2.25
(c) 0.8
(d) 1.25

8. In a bode plot which of the following slopes will be exhibited at high frequencies by a third order all pole system.

(a) -40db
(b) -60bd
(c) 40db
(d) 60db

9. The expansion tank for a diesel engine cooling system is designed to maintain a constant head on the system and _____.

(a) Reduce water temperature
(b) Reduce water turbulence
(c) Provide an air cushion
(d) Allow for a increase in water volume as the engine warms up.

10. The effect of lead compensator is

(e) Stability increases
(f) Rise time decreases
(g) Bandwidth increases
(h) All of the above

Section B

Five Questions of 02 Marks each

11. Write Masons Gain Formula

12. Find the steady state error for the given unity feedback system with open loop transfer function G(s) = 10 / [(s+1)(s+2)] and unit step input.

13. The damping ratio and natural frequency of a second order system are 0.5 and 8 rad/sec respectively. Calculate resonant peak and resonant frequency.

14. State the effect of adding open loop poles and open loop zeros to transfer function in root locus

15. Write a brief note on Two step ON-OFF control.

Section C

Seven Questions of 10 Marks each of which any 05 questions to be answered.

16. For the mechanical system shown in figure obtain differential expressions and draw the force-voltage and force-current electrical analogous circuit. (Marks: 5+5)

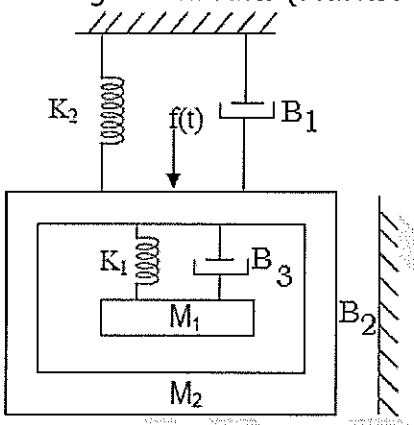

17. (a)Derive the equation of transfer function of Armature controlled DC motor. (5 Marks)
(b) Find the overall gain of the system whose signal flow graph is shown in figure. (5 Marks)

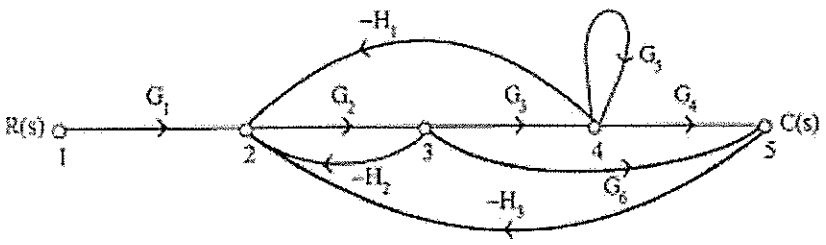

18. (a)Consider the block diagram given below, find C/R using block diagram reduction technique (5 Marks)

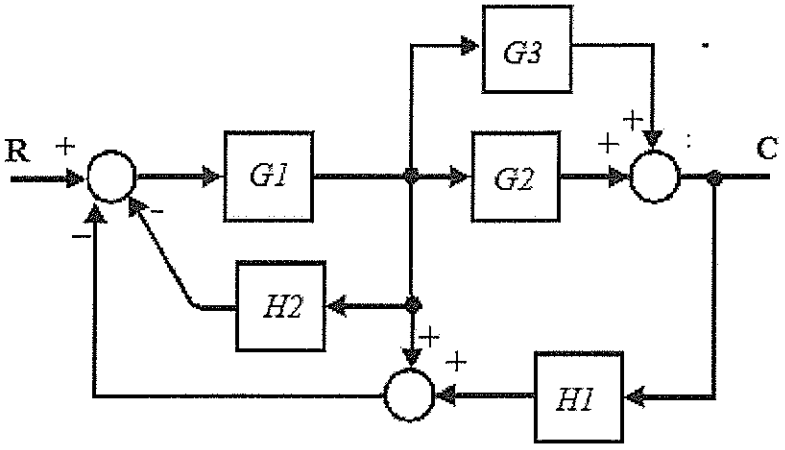

(b) A unity feedback control system has an open loop transfer function G(s) = k / (s(s+10)).Determine the gain k so that the system will have a damping ratio of 0.5 for this value of k. Find the rise time, percentage overshoot, peak time and settling time for a unit step input. (5 Marks)

19. (a)By Routh stability criterion determine the stability of the system represented by the characteristic equation $s^6+2s^5+8s^4+12s^3+20s^2+16s+16=0$.Comment on the location of roots of characteristic equation. (5 Marks)
(b) Sketch root locus of the system whose open loop transfer function is G(s) = k / s(s+2)(s+4), and find the limiting value of K for stability. (5 Marks)

20. (a)For a unity feedback system with open loop transfer function G(s) =4/ (s+1)(s+5), Design a PI controller so that closed loop has a damping ratio of 0.9 and natural frequency of oscillation is 2.5rad/sec. (5 Marks)
(b)Test the controllability of the system whose state space representation is given as

$$\begin{vmatrix} \dot{X1} \\ \dot{X2} \\ \dot{X3} \end{vmatrix} = \begin{vmatrix} 0 & 0 & 1 \\ -2 & -3 & 0 \\ 0 & 2 & -3 \end{vmatrix} \begin{vmatrix} X1 \\ X2 \\ X3 \end{vmatrix} + \begin{vmatrix} 0 \\ 2 \\ 0 \end{vmatrix} [U]$$

$$Y = [1 \quad 0 \quad 1] \begin{vmatrix} X1 \\ X2 \\ X3 \end{vmatrix}$$

(5 Marks)

21. Explain Auto pilot Steering gear control system with PID control using neat sketches (10 Marks)

22. Explain two and three element boiler feed water control system with necessary sketches (10 Marks)